RGBW 4in1 LED Garden Spot Light

Red Green Blue White



848058Z
848059Z



848058P
848059P

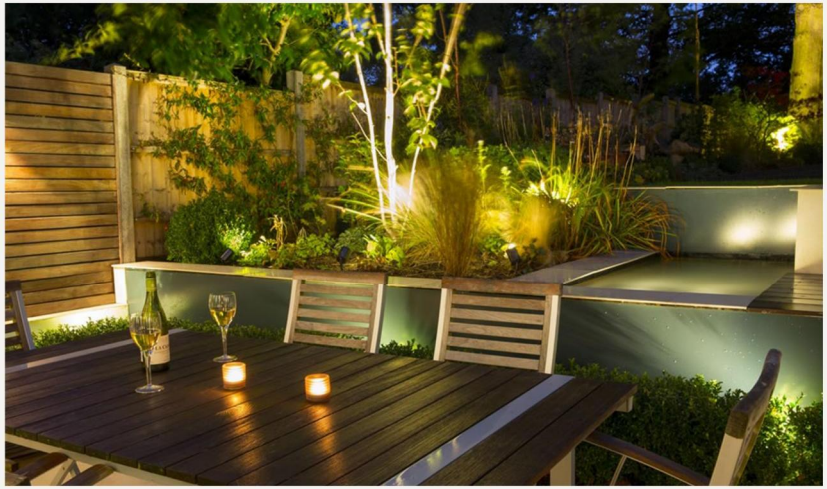

Outer Dimensions ——— Unit:mm

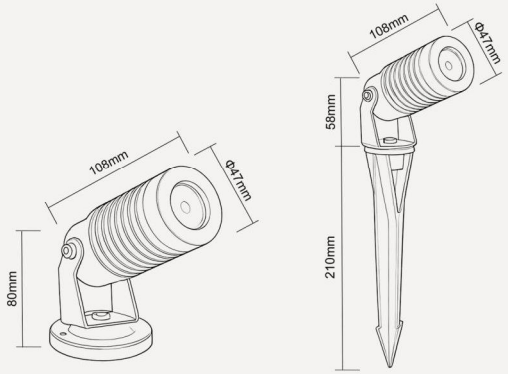

Item No.	Light source	Lens beam angle (°)	Consumption (watt)	Input Voltage (V)	Ik rate
848058Z 848058P	1*5W LED	24°/36°/60°/10*30°	5W	DC12V/DC24V	04
848059Z 848059P	1*6W RGBW4in1 (W=3000/4000/6000)	24°/36°/60°/10*30°	6W	DC12V/DC24V	04

Material specifications

Housing	Aluminum anodized finshing & powder painting
Glass:	Tempered glass. T=3mm
Lens:	Optical lens, efficiency≥85%
Cable gland:	Copper and nickel coated
Gasket:	Tooling shaped seal
LED:	LED
Driver:	Constant current outputut
Spike:	PVC(grey or black)
Mounting base:	Aluminum anodized finshing or powder painting.
Power cable:	H05RN-F 2x0.75mm2 L=1m(low voltage) HO5RN-F5x0.75mm2 L=1m(RGBW)